THIS DOCUMENT IS THE PROPERTY OF KEYSTONE ELECTRONICS CORP. AND SHALL NOT BE REPRODUCED, DISTRIBUTED OR USED AS A BASIS FOR MANUFACTURE WITHOUT PRIOR WRITTEN PERMISSION FROM KEYSTONE ELECTRONICS CORP.

ACTUAL SIZE

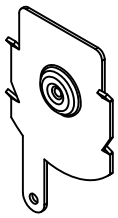

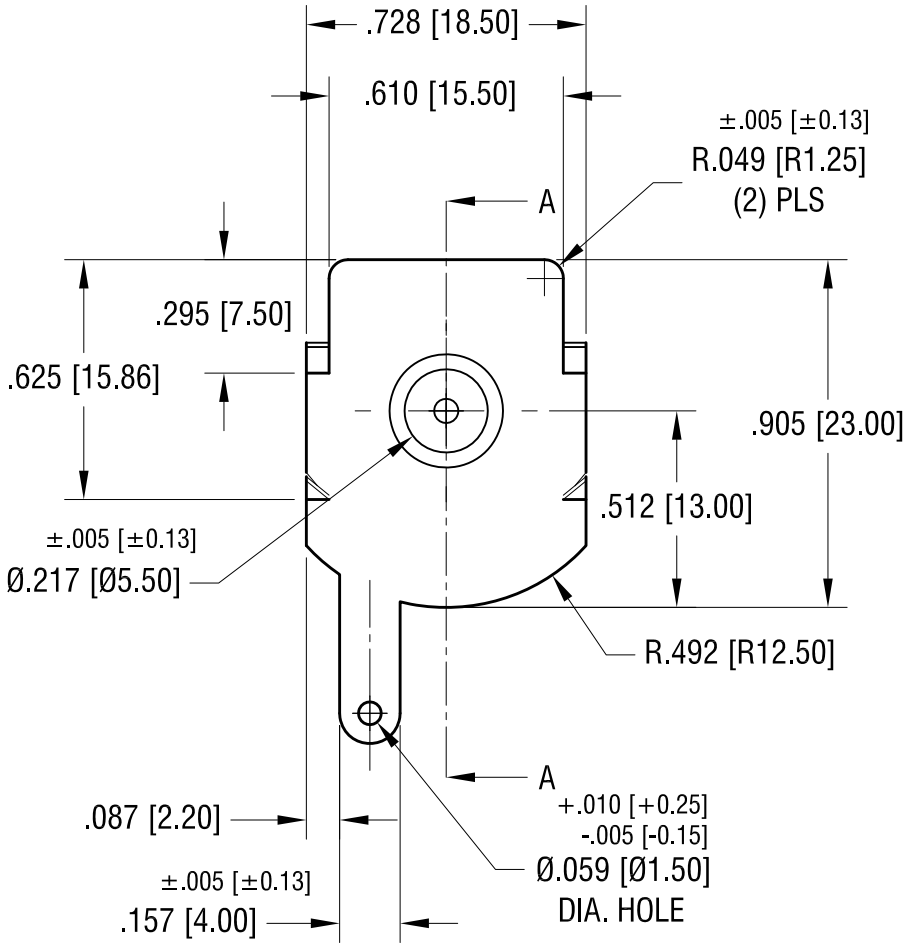

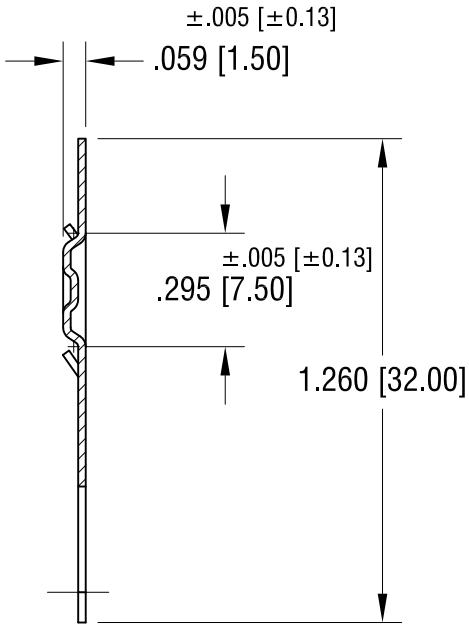

SECTION A-A

DATE	DESCRIPTION	REV.
8.15.17	CHANGE AS PER ECN 17-054	B
5/27/16	CHANGE AS PER ECN 16-061	A

KEYSTONE ELECTRONICS CORP.

www.keyelco.com • ASTORIA, N.Y. 11105-2017 • Tel (718) 956-8900

PART NAME	BATTERY CONTACT		
MATERIAL	.020 [0.50] TH'K STEEL		
FINISH	NICKEL PLATE	DRN BY NT	DATE 3.27.09
		APP'D LN	SCALE 2X
TOLERANCES INCH [MM] DECIMAL ± .010 [± 0.25] ANGULAR ± 1° UNLESS OTHERWISE SPECIFIED	CODE C	DWG NO. 5250	